POGGEMEYER
DESIGN GROUP

LUCAS COUNTY BOARD OF DEVELOPMENTAL DISABILITIES
AHU & CU REPLACEMENT AT LARC LANE ADMINISTRATION BUILDING
1154 LARC LANE
TOLEDO, OHIO

PDG JOB NO. 100262-00001

ADDENDUM NO. 1

August 7, 2018

This addendum becomes a part of the plans and specifications for the indicated work and modifies them only to the extent herein set forth.

Attachments: 18064 Larc Lane Transportation AHU Pre Purchase SDR 062718.pdf

DOCUMENTS

1. Document 00-0020 - Notice to Bidders
   A. Paragraph 5, remove reference to www.pdgplanroom.com.

2. Document 00-0101 - Instructions to Bidders
   A. Paragraph 1.6, B - Change Nick Burn to Nick Bruno.

3. Document 00-0311 - Form of Proposal
   A. Clarification: Mechanical Contractor is the Prime Contractor

4. Document 00-8011 – Supplementary General Conditions
   A. Clarification: Each contractor shall be responsible to secure his portion of any building permit to complete all work required.

5. Add Document 18064 Larc Lane Transportation AHU Pre Purchase SDR 062718.pdf – Pre Purchase Equipment Submittal and shop drawing review comments

SPECIFICATIONS

1. Section 00-8011 – Supplementary General Conditions
   A. All references to “General Contractor” refers to “Contractor”.

QUESTIONS

1 Are permits pulled through Toledo or Lucas County?
RESPONSE: Each contractor shall be responsible to secure his portion of any building permit to complete all work required. Permits through Toledo.

2 Was manufacturer’s start-up purchased with prepackaged air handling unit
RESPONSE: Start-up was not purchased. Start-up shall be furnished by this Contractor.

3. Will no manufacturers start-up effect the warranty?
RESPONSE: Contractor is responsible for warranty as required.

POGGEMEYER
DESIGN GROUP

*** * END OF ADDENDUM * * ***

DESIGN ENGINEERS &
CONSULTING
ASSOCIATES, INC.

SHOP DRAWING REVIEW COMMENTS

Project: Larc Lane Transportation Building AHU/ CU Replacement

DECA Project # 18064

Date Reviewed: 06-27-18

Owner: Larc Lane MRDD (Nick Bruno)

Equipment Submitted for Review: Air Handler AHU-1

Review Status:

_____ No Exceptions Taken _____ Resubmit

__X__ Exceptions Taken as Noted _____ Rejected

Required of Owner: __**X**__ Process _____ Resubmit

THE REVIEW OF THE SHOP DRAWINGS BY THE ENGINEER IS FOR CONFORMANCE WITH THE DESIGN CONCEPT OF THE PROJECT AND THE CONTRACT DOCUMENTS ONLY. REVIEW OF A SEPARATE ITEM DOES NOT INDICATE APPROVAL OF AN ASSEMBLY OR SYSTEM WITH WHICH THE ITEM FUNCTIONS. THIS REVIEW DOES NOT RELIEVE THE CONTRACTOR OF HIS RESPONSIBILITY STATED IN THE GENERAL CONDITIONS NOR DOES IT AUTHORIZE ANY CHANGES INVOLVING ADDITIONAL COST (ON BEHALF OF THE OWNER) UNLESS SPECIFICALLY STATED IN A CHANGE ORDER. THIS CONTRACTOR REMAINS RESPONSIBLE FOR:

A. COMPLIANCE WITH THE CONTRACT DOCUMENTS
B. CONFIRMING AND CORRELATING QUANTITIES AND DIMENSIONS
C. SELECTING FABRICATION PROCESSES AND TECHNIQUES OF CONSTRUCTION
D. COORDINATING OF THIS WORK WITH OTHER TRADES
E. PERFORMING THIS WORK WITH OTHER TRADES
F. COMPLIANCE WITH THE CONTRACTOR'S CONSTRUCTION SCHEDULE
G. ALL OTHER PROVISIONS OF THE AGREEMENT

Comments:

I. Refer to additional comments within attached submittal.

II. Unit shall have the capability to be disassembled and broke down for installation through 32" wide 7'-0" high man door.

IV. Side panels on either side of unit (opposite of access doors) shall be removable for repairs & maintenance.

V. Coordinate temperature control requirement with Control Systems of Ohio.

Reviewed by: Ryan D. Gramling DECA, INC.

415 CONANT STREET
MAUMEE, OH 43537
TEL. (419) 891-0022
FAX (419) 891-0026

Latest Submittal

Submittal

Prepared For:
Design Engineers & Consulting Associates, Inc.
415 Conant St.
Maumee, OH 43537

Date: *June 26, 2018*

Customer P.O. Number: **To Follow**

Sold To:
LCBDD
1155 Larc Lane
Toledo, OH 43614

Job Name: LCBDD – Larc Lane Admin

Trane U.S. Inc. is pleased to provide the enclosed submittal for your review and approval.

Product Summary

Qty	Product
1	Performance Climate Changer

Alexander Stringham
Trane
1001 Hamilton Drive
Holland, OH 43528-8210
Phone: (419) 491-2280
Cell: (419) 350-4142
Alexander.stringham@trane.com

The attached information describes the equipment we propose to furnish for this project, and is submitted for your approval.

Product performance and submittal data is valid for a period of 6 months from the date of submittal generation. If six months or more has elapsed between submittal generation and equipment release, the product performance and submittal data will need to be verified. It is the customer's responsibility to obtain such verification.

Table Of Contents

Tag Data - Performance Climate Changer (Qty: 1)

Item	Tag(s)	Qty	Description	Model Number
A1	CSAA-1	1	Performance Climate Changer (CSAA)	CSAA021UA

Product Data - Performance Climate Changer

Item: A1 Qty: 1 Tag(s): CSAA-1

Unit level options

2.5in. integral base frame
UL listed unit
Multiple composite handles/latches
72.50 Unit length
50.25 Second level length

Controls and VFD/starter

Supply fan field provided VFD
Return/exhaust fan no NEMA

Filter section (Pos #1)

Filter
Angled filter
Door- right side
2in. filter frame
Pleated media - run set (Fld)

Coil section (Pos #2)

Horizontal coil
Medium
Stainless steel drain pan
Left side - drain connection
Left side - coil supply
Service panel both sides
Unit coil height
Cooling coil
Refrigerant
Single use coil
Type "UF" coil
6 rows
112 fins per foot nominal fin spacing
Aluminum fins
Delta flo H (Hi efficient)
Internally enhanced Cu .016 (0.406 mm)
1/2in. tube diameter (12.7 mm)
Galvanized steel coil casing

Coil section (Pos #3)

Vertical coil
Large
Stainless steel drain pan
Left side - drain connection
Left side - coil supply
Service panel both sides
Unit coil height
Heating coil
Hot water
Single use coil
Type "5W" coil
1 row
127 fins per foot nominal fin spacing
Aluminum fins
Prima flo H (Hi efficient)
.020" (0.508 mm) copper tubes
5/8in. tube diameter (15.875 mm)
Galvanized steel coil casing
Turbulators

Fan section (Pos #4)

Fan section
Supply fan
Door- right side
Outward swing
22in. diameter AF, H press
Back-top discharge
Right side drive
NEMA premium compliant ODP
Voltage 200-208/3
15 max applied hp
1800 RPM
Inverter balance with shaft grounding
Field provided VFD

Performance Data - Performance Climate Changer

Tags	CSAA-1	
Unit level options		
Position		
Length (in)	72.500	
Width (in)	80.000	
Height (in)	105.500	
Rigging weight (lb)	2700.8	
Installed weight (lb)	2728.7	
Roof curb weight (lb)	0.0	
Actual airflow (cfm)	11500	
Unit elevation (ft)	0.00	
Shipping split 1 weight (lb)	1372.7	
Shipping split 2 weight (lb)	1356.0	
Fan section		
Position	**#4**	
Section length (in)	50.250	
Section weight (lb)	1356.0	
Fan airflow (cfm)	11500	
Elevation (ft)	0.00	
Overall ESP (in H2O)	2.350	
Total static pressure (in H2O)	4.035	
Fan discharge loss pressure drop (in H2O)	0.000	
Fan pressure drop (in H2O)	2.350	
Fan outlet velocity (ft/min)	2075	
Speed (rpm)	1650	
Total brake horsepower (hp)	12.158	
Unit static efficiency (%)	60.18	
Outlet area (sq ft)	5.54	
Motor hertz (Hz)	60	
Coil section		
Position	**#2**	**#3**
Section length (in)	14.000	34.000
Section weight (lb)	467.2	575.1
Coil performance airflow (cfm)	11500	11500
Unit airflow (cfm)	11500	11500
Coil face area (sq ft)	20.81	19.83
Coil face velocity (ft/min)	553	580
Air pressure drop (in H2O)	0.952	0.144
Coil section pressure drop (in H2O)	0.952	0.144
Coil rigging weight (lb)	286.2	99.1
Coil installed weight (lb)	-	127.1
Top or single coil dry weight (lb)	286.2	99.1
Leaving dry bulb (F)	55.00	95.00
Leaving wet bulb (F)	54.58	-
Entering dry bulb (F)	80.00	60.00
Entering wet bulb (F)	67.00	-
Fluid type	-	Water
Coil fluid percentage (%)	-	100.00
Entering fluid temperature (F)	-	180.00
Leaving fluid temperature (F)	-	145.10
Fluid temperature drop (F)	-	34.90
Standard fluid flow rate (gpm)	-	25.00
Fluid pressure drop (ft H2O)	-	2.63
Fluid velocity (ft/s)	-	1.97
Fluid volume (gal)	13.10	3.36
Liquid temp entering TXV (F)	115.00	-

Tags	CSAA-1	
Saturated suction temperature (F)	45.00	-
Suction superheat (F)	8.00	-
Sensible capacity (MBh)	315.65	-
Total capacity (MBh)	441.75	436.51
Filter section		
Position	**#1**	
Section length (in)	24.500	
Section weight (lb)	330.4	
Filter airflow (cfm)	11500	
Filter area (sq ft)	33.33	
Filter condition	Mid-life	
Filter pressure drop (in H2O)	0.590	
Filter section pressure drop (in H2O)	0.590	
Filter face velocity (ft/min)	345	

Mechanical Specifications - Performance Climate Changer
Item: A1 Qty: 1 Tag(s): CSAA-1

GENERAL

Per ASHRAE 62.1 recommendation, indoor air handling units will be shipped stretch-wrapped to protect unit from in-transit rain and debris.

Installing contractor is responsible for long term storage in accordance with the Installation, Operation, and Maintenance manual (CLCH-SVX07B-EN).

Unit shall be UL and C-UL Listed.

Supply fans within the scope of AHRI Standard 430 shall be certified in accordance with AHRI Standard 430.

Unit sound performance data shall be provided using AHRI Standard 260 test methods and reported as sound power. Trane, in providing this program and data, does not certify or warrant NC levels. These levels are affected by factors specific to each application and/or installation and therefore unable to be predicted or certified by Trane. *Refer to product data for specific fan footnote references.*

Unit Construction

All unit panels shall be 2" solid, double-wall construction to facilitate cleaning of unit interior. Unit panels shall be provided with a mid-span, no-through-metal, internal thermal break. Casing thermal performance shall be such that under 55°F supply air temperature and design conditions on the exterior of the unit of 81°F dry bulb and 73°F wet bulb, condensation shall not form on the casing exterior.

All exterior and interior indoor AHU panels will be made of galvanized steel.

Unit Paint

Unit to ship unpainted from factory. If required, unit to be painted by 3rd party finisher, or by painting contractor at job site.

Casing Deflection
The casing shall not exceed 0.0042 inch deflection per inch of panel span at 1.00 times design static pressure. Maximum design static shall not exceed +8 inches w.g. in all positive pressure sections and -8 inches w.g. in all negative pressure sections.

Floor Construction
The unit floor shall be of sufficient strength to support a 300.0 lb load during maintenance activities and shall deflect no more than 0.0042 inch per inch of panel span.

Unit base
Manufacturer to provide a full perimeter integral base frame for either ceiling suspension of units or to support and raise all sections of the unit for proper trapping. Indoor unit base frame will either be bolted construction or welded construction. All outdoor unit base frames shall be welded construction. For indoor units, refer to schedule for base height and construction type. Contractor will be responsible for providing a housekeeping pad when unit base frame is not of sufficient height to properly trap unit. Unit base frames not constructed of galvanized steel shall be chemically cleaned and coated with both a rust-inhibiting primer and finished coat of rust-inhibiting enamel. Unit base height to be included in total height required for proper trap height.

Insulation
Panel insulation shall provide a minimum thermal resistance (R) value of 13 ft^2-h-°F/Btu throughout the entire unit. Insulation shall completely fill the panel cavities in all directions so that no voids exist and settling of insulation is prevented. Panel insulation shall comply with NFPA 90A.

Drain Pan
In sections provided with a drain pan, the drain pan shall be designed in accordance with ASHRAE 62.1. To address indoor air quality (IAQ) the drain pan shall be sloped in two planes promoting positive drainage to eliminate stagnant water conditions. Drain pan shall be insulated, and of double wall construction. The outlet shall be the lowest point on the pan, and shall be of sufficient diameter to preclude drain pan overflow under normally expected operating conditions. All drain pans connections shall have a threaded connection, extending a minimum of 2-1/2" beyond the unit

base, and shall be made from the same material as the drain pan. Drain pan located under a cooling coil shall be of sufficient size to collect all condensate produced from the coil.
Refer to Product Data for specific information on which sections are supplied with a drain pan, the drain pan material and connection location.

Access Door Construction
Access doors shall be 2" double wall construction. Interior and exterior door panels shall be of the same construction as the interior and exterior wall panels respectively. All doors shall be provided with a thermal break construction of door panel and door frame. Gasketing shall be provided around the full perimeter of the doors to prevent air leakage. Surface mounted handles shall be provided to allow quick access to the interior of the functional section and to prevent through cabinet penetrations that could likely weaken the casing leakage and thermal performance. Handle hardware shall be designed to prevent unintended closure. Access doors shall be hinged and removable for quick easy access. Hinges shall be interchangeable with the door handle hardware to allow for alternating door swing in the field to minimize access interference due to unforeseen job site obstructions. Door handle hardware shall be adjustable and visually indicate locking position of door latch external to the section. Door hinges shall be galvanized.

All doors shall be a minimum of 60" high when sufficient height is available or the maximum height allowed by the unit height.

Door handles shall be provided for each latching point of the door necessary to maintain the specified air leakage integrity of the unit. Optionally for indoor AHUs and as standard on outdoor AHUs, outward swing doors are provided with a single handle linked to multiple latching points. An optional shatterproof window shall be provided in access doors where indicated on the plans. Window shall either be single pane, or thermal dual pane, as defined on schedule. Window shall be capable of withstanding unit operating pressures and shall be safe for viewing UV-C lamps.
Refer to Product Data for specific information on which sections are supplied with an access door, the door location, a single handle and a window.

FILTER SECTION
A section shall be provided to support the filter rack as indicated throughout the unit. Refer to Product Data and As-Built sections of the submittal for specific locations within each unit.

Primary Filters

2-inch pleated media filters made with 100% synthetic fibers that are continuously laminated to a supported steel-wire grid with water repellent adhesive shall be provided. Filters shall be capable of operating up to 625 fpm face velocity without loss of filter efficiency and holding capacity. The filters shall have a MERV 8 rating when tested in accordance with the ANSI/ASHRAE Standard 52.2.

COIL SECTION WITH FACTORY INSTALLED COIL
The coil section shall be provided complete with coil and coil holding frame. The coils shall be installed such that headers and return bends are enclosed by unit casings. If two or more cooling coils are stacked in the unit, an intermediate drain pan shall be installed between each coil and be of the same material as the primary drain pan. Like the primary drain pan, the intermediate drain pan shall be designed being of sufficient size to collect all condensation produced from the coil and sloped to promote positive drainage to eliminate stagnant water conditions. The intermediate pan shall begin at the leading face of the water-producing device and be of sufficient length extending downstream to prevent condensate from passing through the air stream of the lower coil. Intermediate drain pan shall include downspouts to direct condensate to the primary drain pan. The outlet shall be located at the lowest point of the pan and shall be sufficient diameter to preclude drain pan overflow under any normally expected operating condition.

In lieu of a door, an easily removable service panel shall be provided in sections as specified, to facilitate access to unit for periodic servicing, or for removal and replacement of coils. Removal of service panel will not impact the structural integrity of the unit.

Hydronic coils shall be supplied with factory installed drain and vent piping to unit casing exterior. Piping is to facilitate field installation of automatic venting or drain valves on coils, which are not supplied with unit. *Refer to the Product Data section of the submittal for the units and/or coils supplied with drain and vent piping.*

No casing penetrations supplied for hydronic drain and vents. If required, piping contractor will need to drill drain and vent penetrations using factory located features provided in coil panel.

Refrigerant Cooling Coils
The coils shall have aluminum fins and seamless copper tubes. The fins shall have collars drawn, belled, and firmly bonded to tubes by mechanical expansion of the tubes. Suction and liquid line connections shall extend to the unit

exterior. The coil casing may be galvanized or stainless steel. Refer to the Product Data section of the submittal for the coil casing material.
The coils shall be proof-tested to 450 psig and leak-tested to 300 psig air pressure under water. After testing, the inside of the coils shall be dried, all connections shall be sealed, and the coil shall be shipped with a charge of dry air. Suction headers and liquid connections shall be constructed of copper tubing with connections penetrating unit casings to permit sweat connections to refrigerant lines. The coils shall have equalizing vertical distributors sized according to the capacities of the coils. Coils are certified in accordance with the AHRI Forced-Circulation Air-Cooling and Air-Heating Coils Certification Program which is based on AHRI Standard 410 within the Range of Standard Rating Conditions listed in Table 1 of the Standard. Certified units may be found in the AHRI Directory at www.ahridirectory.org.

Water Coils (UP, WP, UW, UU, UA, 3W, 3U, W, 5W, 5A, WD, 5D, D1, D2, P, or TT)
The coils shall have aluminum fins and seamless copper tubes. Copper fins may be applied to coils with 5/8-inch tubes. Fins shall have collars drawn, belled, and firmly bonded to tubes by mechanical expansion of the tubes. The coil casing may be galvanized or stainless steel. Refer to the Product Data section of the submittal for the coil casing material. The coils shall be proof-tested to 300 psig and leak-tested under water to 200 psig. Coils containing water or ethylene glycol are certified in accordance with the AHRI Forced-Circulation Air-Cooling and Air-Heating Coils Certification Program which is based on AHRI Standard 410 within the Range of Standard Rating Conditions listed in Table 1 of the Standard. Certified units may be found in the AHRI Directory at www.ahridirectory.org. Propylene glycol and calcium chloride, or mixtures thereof, are outside the scope of AHRI Standard 410 and, therefore, do not require AHRI 410 rating or certification.

Coil connections are constructed of cast iron with female connections, steel block with female connections or steel pipe with male connections. Type P or TT coil connections do not extend out of unit casing. All other water coil types have connections that extend out beyond unit casing. Headers on downstream coil bank of staggered coil sections do not extend beyond the unit casing and must be completed by the on-site piping contractor.

Tubes are 5/8" [16 mm] OD 0.020" [0.508 mm] thick copper.

Refrigerant coil tubes are 1/2" [13mm] OD, 0.016" [0.406mm] thick, internally enhanced copper.

Fans that are selected with inverter balancing shall first be dynamically balanced at design RPM. The fans then will be checked in the factory from 25% to 100% of design RPM to insure they are operating within vibration tolerance specifications, and that there are no resonant frequency issues throughout this operating range. Inverter balancing that requires lockout frequencies inputted into a variable frequency drive to in order to bypass resonant frequencies shall not be acceptable. If supplied in this manner by the unit manufacturer, the contractor will be responsible for rebalancing in the field after unit installation. Fans selected with inverter balancing shall have a maintenance free grounding assembly installed on the fan motor to discharge both static and induced shaft currents to ground.

AF FAN SECTION
The fan type shall be provided as required for stable operation and optimum energy efficiency. The fan shall be a double-width, double-inlet, multiblade-type, airfoil (AF) fan. The fan shall be equipped with self-aligning, antifriction bearings with an L-50 life of 200,000 hours, as calculated per ANSI/AFBMA Standard 9. For any bearing requiring relubrication, the grease line shall be extended to the fan support bracket on the drive side. The fan shall be statically and dynamically balanced at the factory as a complete fan assembly (fan wheel, motor, drive, and belts). The fan shaft shall not exceed 75 percent of its first critical speed at any cataloged speed. Fan wheels shall be keyed to the fan shaft to prevent slipping. The fan shafts shall be solid steel. The fan section shall be provided with an access door on the drive side of the fan. Fan performance shall be certified as complying with AHRI Standard 430.

Drive Service Factor

The drives shall be constant speed with fixed-pitch sheaves. The drives shall be selected at a minimum 50 percent larger than the motor brake horsepower (1.5 service factor).

Motor Frame
The motor shall be mounted integral to the isolated fan assembly and furnished by the unit manufacturer. The motor is mounted inside the unit casing on an adjustable base to permit adjustment of drive belt tension (not applicable for direct drive plenum fans). The motor shall meet or exceed all NEMA Standards Publication MG 1 requirements and comply with NEMA Premium efficiency levels when applicable except for fractional horsepower motors which are not covered by the NEMA classification. The motor shall be T-frame, squirrel cage with size, type, and electrical characteristics as shown on the equipment schedule. *Refer to the Product Data section for selected fan motors within each unit.*

Two-Inch Spring Isolators
The fan and motor assembly (on sizes 10 to 120) shall be internally isolated from the unit casing with 2-inch (50.8 mm)

deflection spring isolators, furnished and installed by the unit manufacturer. The isolation system shall be designed to resist loads produced by external forces, such as earthquakes, and conform to the current IBC seismic requirements.

Lifting Instructions

The air handling units must be rigged, lifted, and installed in strict accordance with the Installation, Operation, and Maintenance manual (CLCH-SVX07G-EN). The units are also to be installed in strict accordance with the specifications. Units may be shipped fully assembled or disassembled to the minimum functional section size in accordance with shipping and job site requirements.

Indoor units shall be shipped on an integral base frame (variable from the standard 2.5" to 8" height) for the purpose of mounting units to a housekeeping pad and providing additional height to properly trap condensate from the unit. The integral base frame may be used for ceiling suspension, external isolation, or as a housekeeping pad. Indoor sizes 3 to 30 will also be shipped with a shipping skid designed for forklift transport. Refer to the unit As-Built or Product Data section of the submittal for the base frame height of each unit.

All units will be shipped with an integral base frame designed with the necessary number of lift points for safe installation. All lifting lugs are to be utilized during lift. The lift points will be designed to accept standard rigging devices and be removable after installation. Units shipped in sections will have a minimum of four points of lift.

As-Built - Performance Climate Changer
Item: A1 Qty: 1 Tag(s): CSAA-1

1 .875" Liquid Dist.
2 1.375" Suction Con.
3 1.5" (NPTE) Return
4 1.5" (NPTE) Supply
5 3/8" (NPTI) Vent
6 3/8" drain (NPTI)
7 .875" Liquid Dist.
8 1.375" Suction Con.
9 1.5" (NPTE) Return
10 1.5" (NPTE) Supply
11 3/8" (NPTI) Vent
12 3/8" drain (NPTI)
13 Housed fan - 22in. diameter AF, H press Supply fan 15 hp 200-208/3
14 Heating coil - 1 Coil type 5W
15 Cooling coil - 6 Coil type UF
16 BKTP discharge opening 28.250 x 28.250

Doors
22 width x 46 height
20 width x 46 height

Hwt Dx Coil Connections Cond. Connection On this side

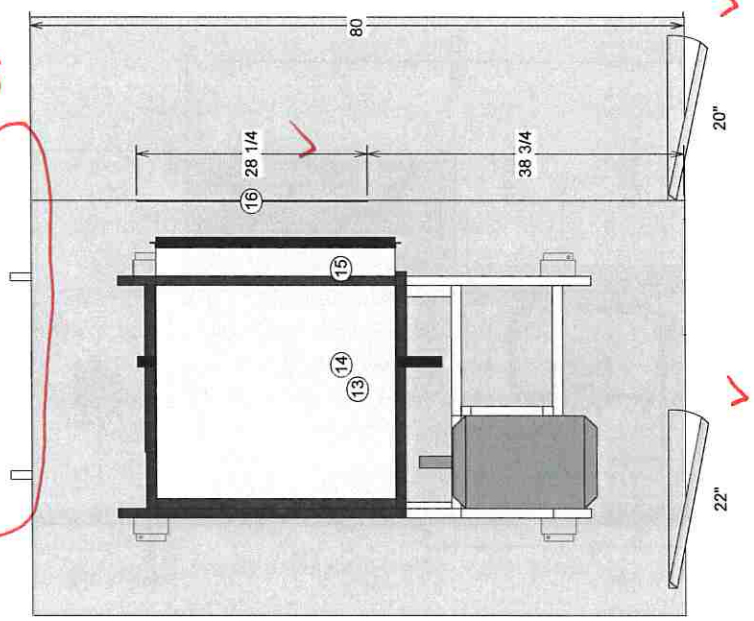

For maneuvering purposes, include 1.125 inches to each ship split length for overlapping panel flange. Flange will not add to overall installed unit length shown.

OPENING AND DIMENSIONS MAY VARY FROM CONTRACT DOCUMENTS / RETURN OF APPROVED DRAWINGS CONSTITUTES ACCEPTANCE OF THESE VARIANCES / NOT TO SCALE

Unit size: 21	Job Name:	Unit Casing: 2in Double Wall Foam
Product group: Indoor unit	Actual airflow: 11500 cfm	Proposal Number:
Integral base frame: 2.5in. integral base frame	Sales Office:	Rigging/Installed Weight: 2700.7 lb/ 2728.7 lb
Paint: Unpainted/field painted		

TRANE® Performance Climate Changer Air Handlers

As-Built - Performance Climate Changer
Item: A1 Qty: 1 Tag(s): CSAA-1

1 .875" Liquid Dist.
2 1.375" Suction Con.
3 1.5" (NPTE) Return
4 1.5" (NPTE) Supply
5 3/8" (NPTI) Vent
6 3/8" drain (NPTI)
7 .875" Liquid Dist.
8 1.375" Suction Con.
9 1.5" (NPTE) Return
10 1.5" (NPTE) Supply
11 3/8" (NPTI) Vent
12 3/8" drain (NPTI)
13 Housed fan - 22in. diameter AF, H press Supply fan 15 hp 200-208/3
14 Heating coil - 1 Coil type SW
15 Cooling coil - 6 Coil type UF
16 BKTP discharge opening 28.250 x 28.250

Doors
22 width x 46 height
20 width x 46 height

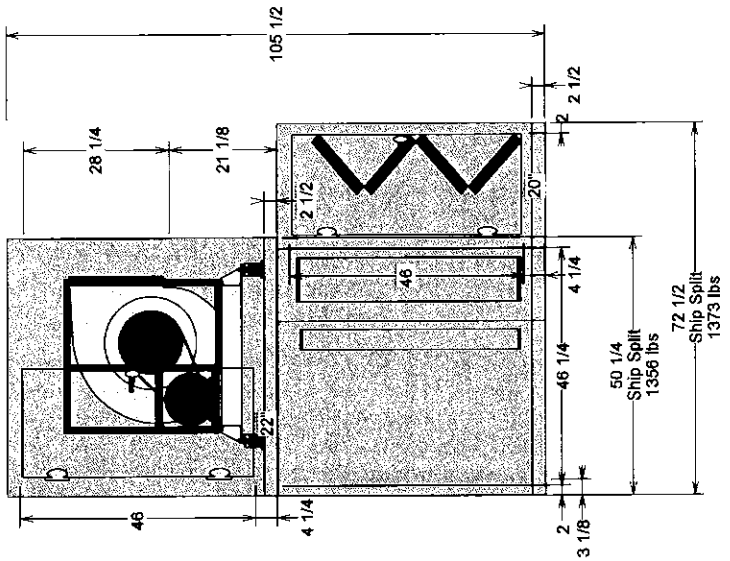

For maneuvering purposes, include 1.125 inches to each ship split length for overlapping panel flange. Flange will not add to overall installed unit length shown.

OPENING AND DIMENSIONS MAY VARY FROM CONTRACT DOCUMENTS / RETURN OF APPROVED DRAWINGS CONSTITUTES ACCEPTANCE OF THESE VARIANCES / NOT TO SCALE

Unit size: 21	Job Name:	Unit Casing: 2in Double Wall Foam
Product group: Indoor unit	Actual airflow: 11500 cfm	Proposal Number:
Integral base frame: 2.5in. Integral base frame	Sales Office:	Rigging/Installed Weight: 2700.7 lb/ 2728.7 lb
Paint: Unpainted/field painted		

TRANE® Performance Climate Changer Air Handlers

As-Built - Performance Climate Changer
Item: A1 Qty: 1 Tag(s): CSAA-1

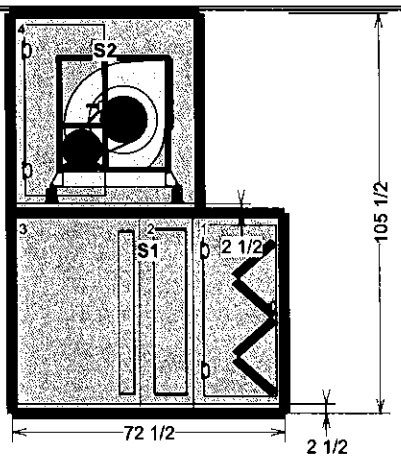

For maneuvering purposes, include 1.125 inches to each ship split length for overlapping panel flange. Flange will not add to overall installed unit length si

Pos #	Module	Length	Weight
4	Fan section	50 1/4	1356.00
2	Coil section	14	467.20
3	Coil section	34	575.10
1	Filter section	24 1/2	330.40

Installed Unit Weight 2728.70 lbs

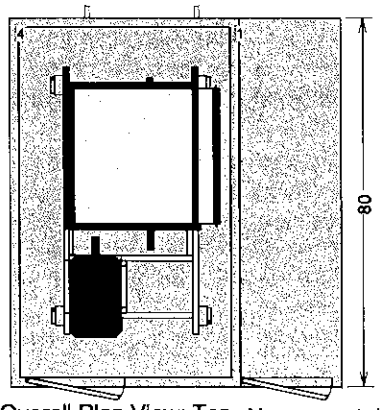

Basic Overall Plan View: Top - Measurements in inches

OPENING AND DIMENSIONS MAY VARY FROM CONTRACT DOCUMENTS / RETURN OF APPROVED DRAWINGS CONSTITUTES ACCEPTANCE OF THESE VARIANCES / NOT TO SCALE

Unit size: 21	Job Name:	Unit Casing: 2in Double Wall Foam	TRANE®
Product group: Indoor unit	Actual airflow: 11500 cfm	Proposal Number:	Performance Climate Changer Air Handlers
Integral base frame: 2.5in. Integral base frame			
Paint: Unpainted/field painted	Sales Office:	Rigging/Installed Weight: 2700.7 lb/ 2728.7 lb	

As-Built - Performance Climate Changer
Item: A1 Qty: 1 Tag(s): CSAA-1

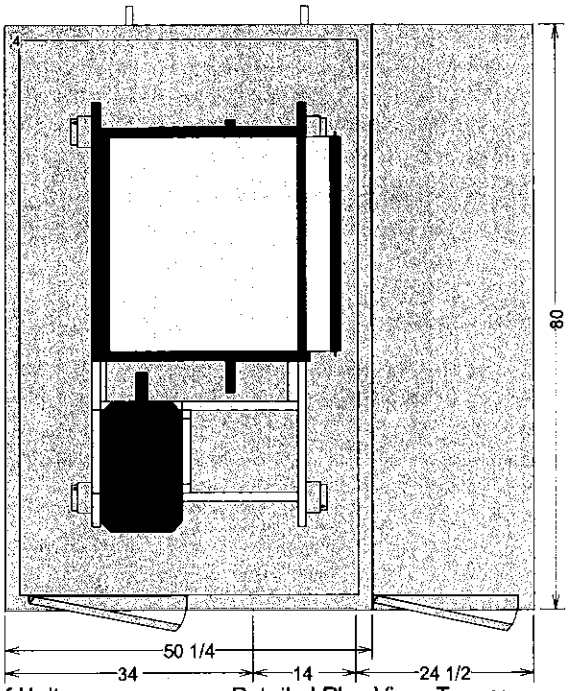

Right Side of Unit

Detailed Plan View: Top - Measurements in inches

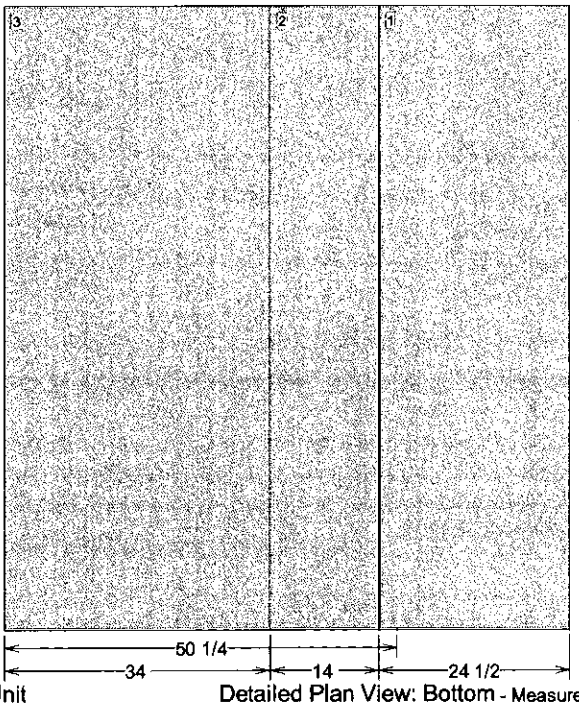

Left Side of Unit

Detailed Plan View: Bottom - Measurements in inches

OPENING AND DIMENSIONS MAY VARY FROM CONTRACT DOCUMENTS / RETURN OF APPROVED DRAWINGS CONSTITUTES ACCEPTANCE OF THESE VARIANCES / NOT TO SCALE

Unit size: 21	Job Name:	Unit Casing: 2in Double Wall Foam	TRANE®
Product group: Indoor unit	Actual airflow: 11500 cfm	Proposal Number:	
Integral base frame; 2.5in. integral base frame			Performance Climate Changer Air Handlers
Paint: Unpainted/field painted	Sales Office:	Rigging/Installed Weight: 2700.7 lb/ 2728.7 lb	

As-Built - Performance Climate Changer
Item: A1 Qty: 1 Tag(s): CSAA-1

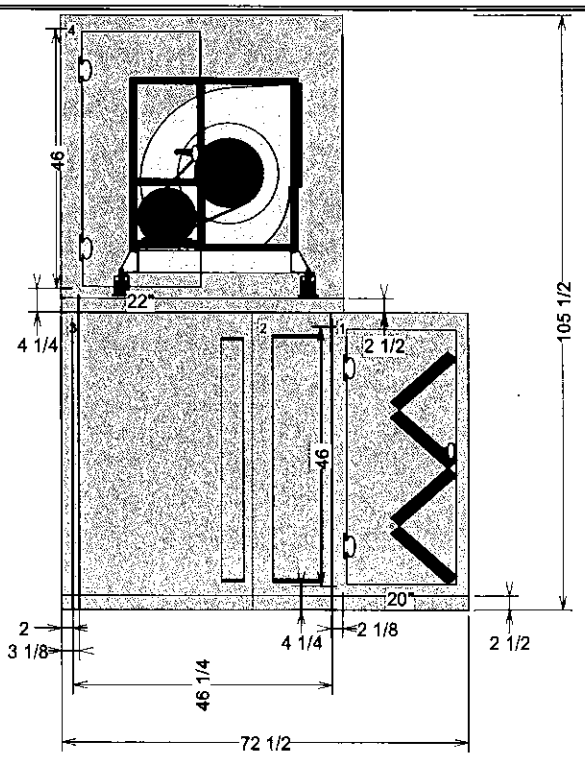

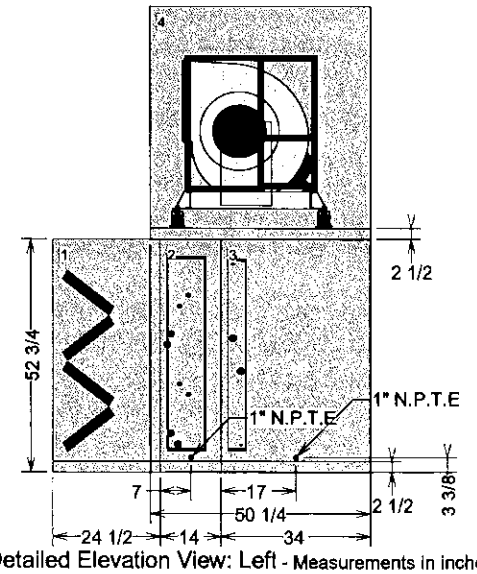

Detailed Elevation View: Left - Measurements in inches

OPENING AND DIMENSIONS MAY VARY FROM CONTRACT DOCUMENTS / RETURN OF APPROVED DRAWINGS CONSTITUTES ACCEPTANCE OF THESE VARIANCES / NOT TO SCALE

Unit size: 21	Job Name:	Unit Casing: 2in Double Wall Foam	TRANE® Performance Climate Changer Air Handlers
Product group: Indoor unit	Actual airflow: 11500 cfm	Proposal Number:	
Integral base frame: 2.5in. Integral base frame			
Paint: Unpainted/field painted	Sales Office:	Rigging/Installed Weight: 2700.7 lb/ 2726.7 lb	

As-Built - Performance Climate Changer
Item: A1 Qty: 1 Tag(s): CSAA-1

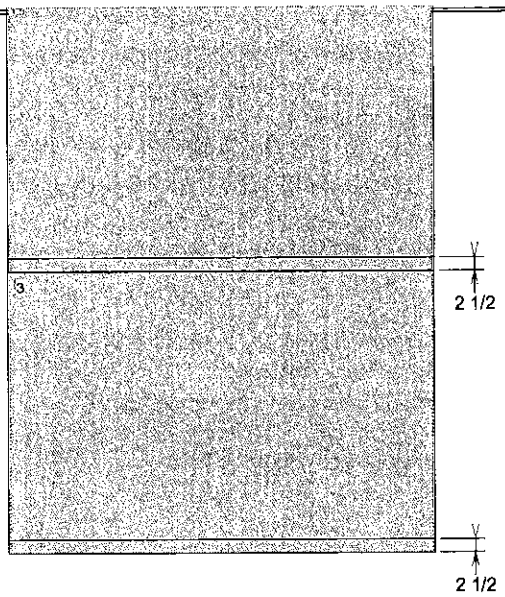

Detailed Elevation View: Front - Measurements in Inches

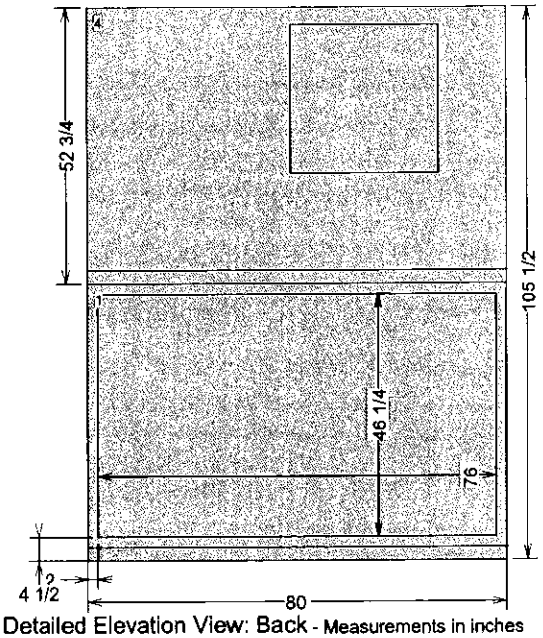

Detailed Elevation View: Back - Measurements in inches

OPENING AND DIMENSIONS MAY VARY FROM CONTRACT DOCUMENTS / RETURN OF APPROVED DRAWINGS CONSTITUTES ACCEPTANCE OF THESE VARIANCES / NOT TO SCALE

Unit size: 21	Job Name:	Unit Casing: 2in Double Wall Foam	TRANE® Performance Climate Changer Air Handlers
Product group: Indoor unit	Actual airflow: 11500 cfm	Proposal Number:	
Integral base frame: 2.5in. integral base frame			
Paint: Unpainted/field painted	Sales Office:	Rigging/Installed Weight: 2700.7 lb/ 2728.7 lb	

As-Built - Performance Climate Changer
Item: A1 Qty: 1 Tag(s): CSAA-1

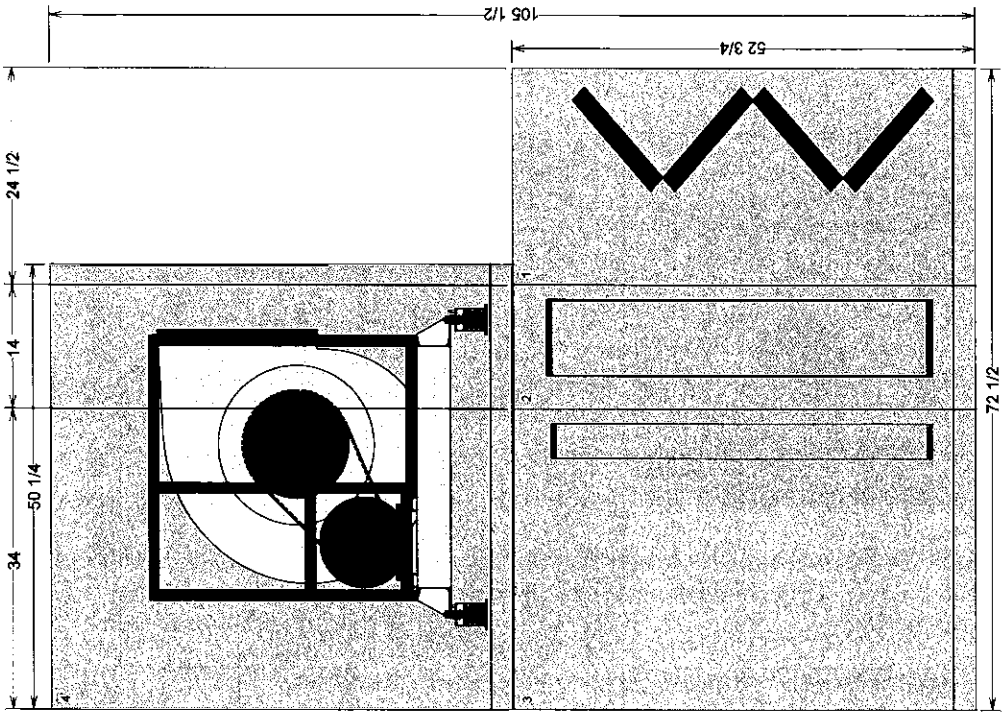

NPTI : National Pipe Thread Internal Connection
NPTE : National Pipe Thread External Connection

OPENING AND DIMENSIONS MAY VARY FROM CONTRACT DOCUMENTS / RETURN OF APPROVED DRAWINGS CONSTITUTES ACCEPTANCE OF THESE VARIANCES / NOT TO SCALE

Unit size: 21	Job Name:	Unit Casing: 2in Double Wall Foam
Product group: Indoor unit	Actual airflow: 11500 cfm	Proposal Number:
Integral base frame: 2.5in. integral base frame	Sales Office:	Rigging/Installed Weight: 2700.7 lb/ 2728.7 lb
Paint: Unpainted/field painted		

TRANE® Performance Climate Changer Air Handlers

As-Built - Performance Climate Changer
Item: A1 Qty: 1 Tag(s): CSAA-1

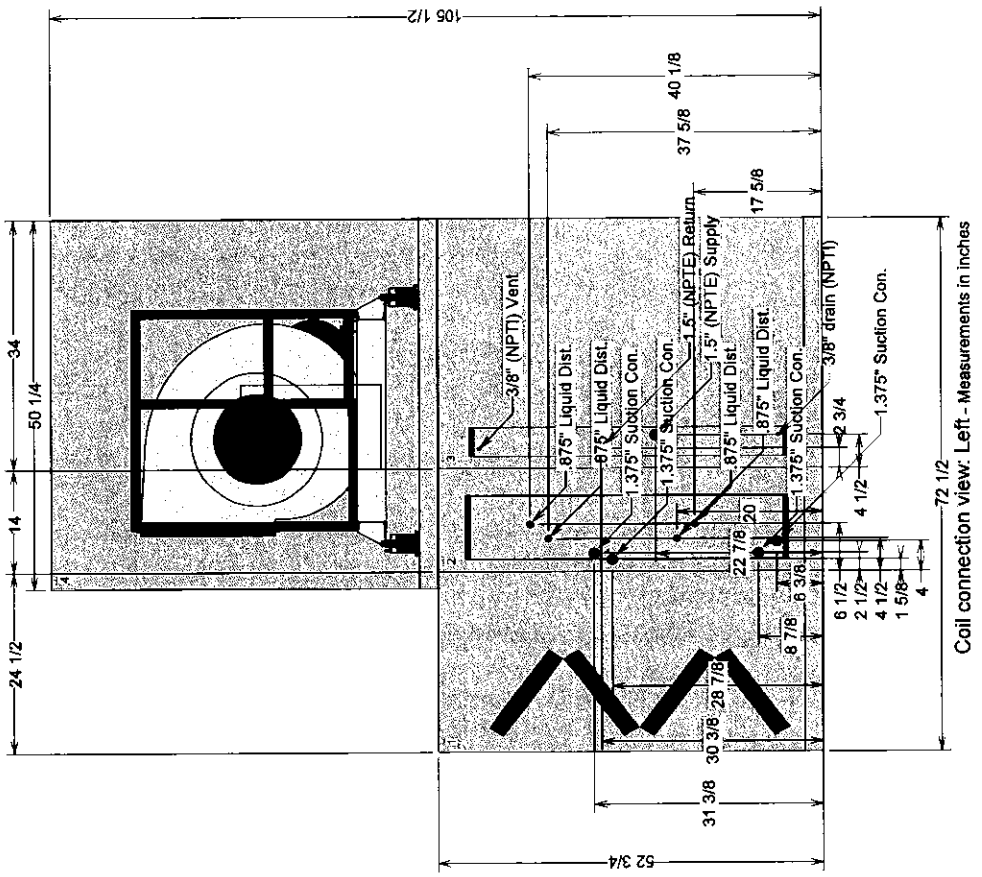

Coil connection view: Left - Measurements in inches

NPTI : National Pipe Thread Internal Connection
NPTE : National Pipe Thread External Connection

OPENING AND DIMENSIONS MAY VARY FROM CONTRACT DOCUMENTS / RETURN OF APPROVED DRAWINGS CONSTITUTES ACCEPTANCE OF THESE VARIANCES / NOT TO SCALE

Unit size: 21	Job Name:	Unit Casing: 2in Double Wall Foam
Product group: Indoor unit	Actual airflow: 11500 cfm	Proposal Number:
Integral base frame: 2.5in. integral base frame	Sales Office:	Rigging/Installed Weight: 2700.7 lb/ 2728.7 lb
Paint: Unpainted/field painted		

TRANE® Performance Climate Changer Air Handlers

As-Built - Performance Climate Changer
Item: A1 Qty: 1 Tag(s): CSAA-1

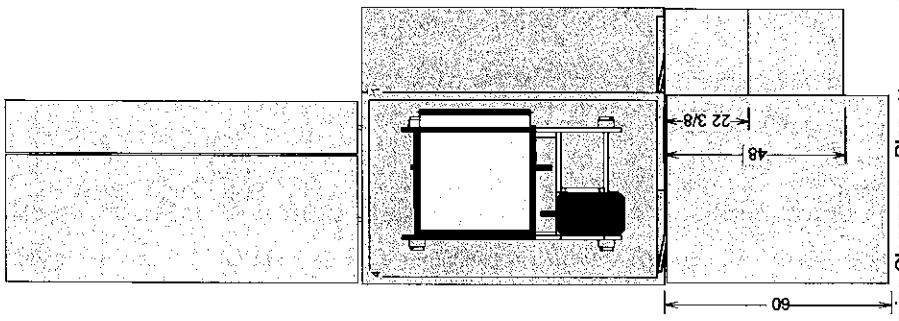

Basic Service Clearance - Plan - Measurements in inches

OPENING AND DIMENSIONS MAY VARY FROM CONTRACT DOCUMENTS / RETURN OF APPROVED DRAWINGS CONSTITUTES ACCEPTANCE OF THESE VARIANCES / NOT TO SCALE

Unit size: 21	Job Name:	Unit Casing: 2in Double Wall Foam
Product group: Indoor unit	Actual airflow: 11500 cfm	Proposal Number:
Integral base frame: 2.5in. integral base frame	Sales Office:	Rigging/Installed Weight: 2700.7 lb/ 2728.7 lb
Paint: Unpainted/field painted		

TRANE® Performance Climate Changer Air Handlers

Fan Curve - Performance Climate Changer
Item: A1 Qty: 1 Tag(s): CSAA-1

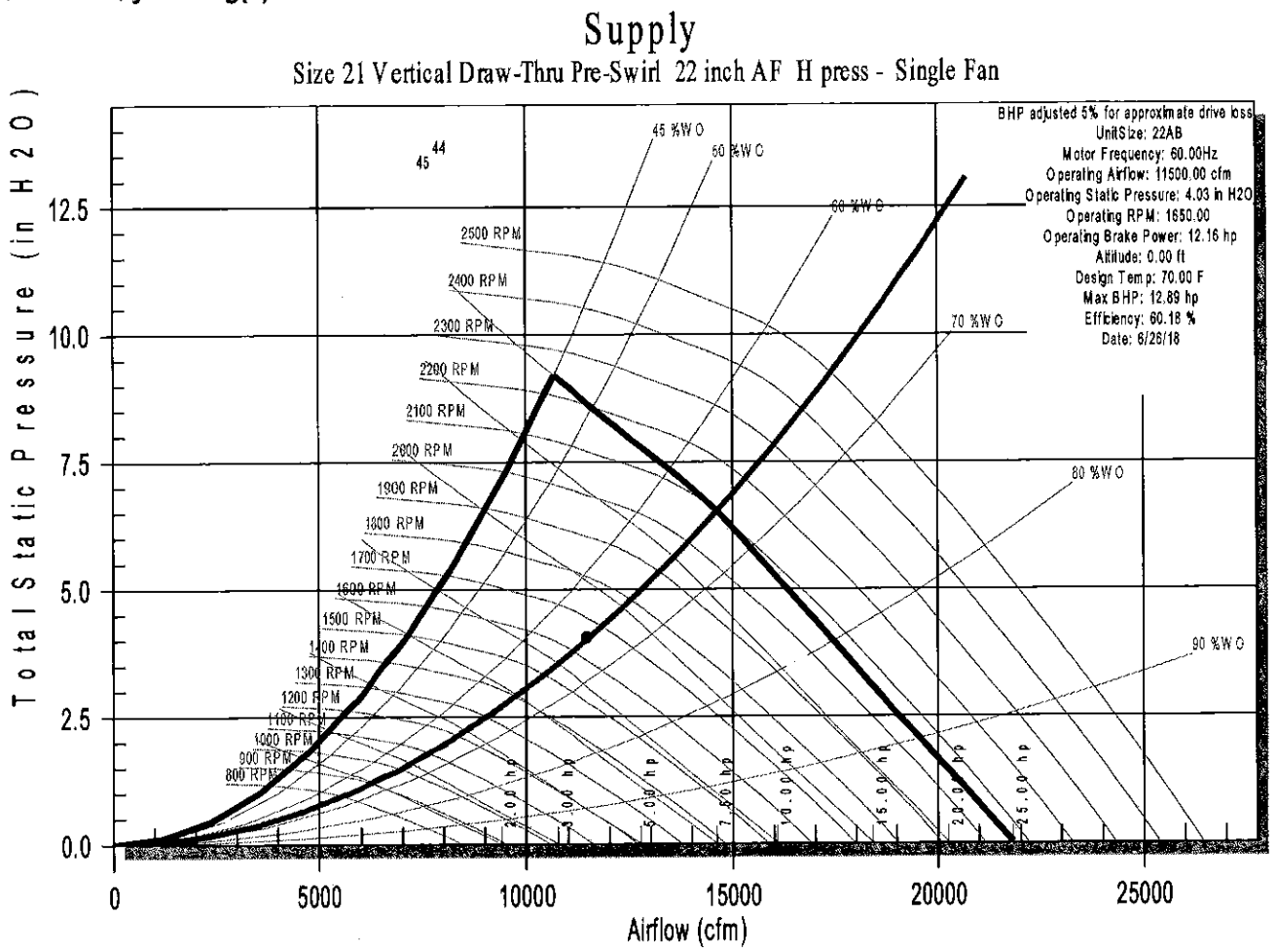

EXAMPLE UNIT - NOT CONFIGURED AS SELECTED.

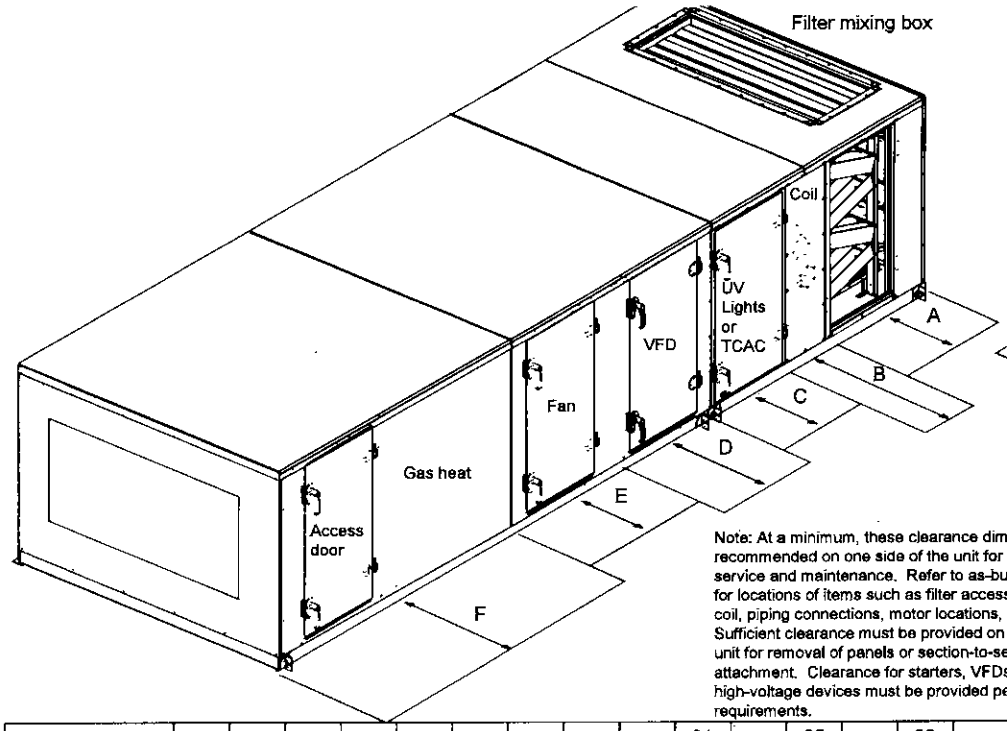

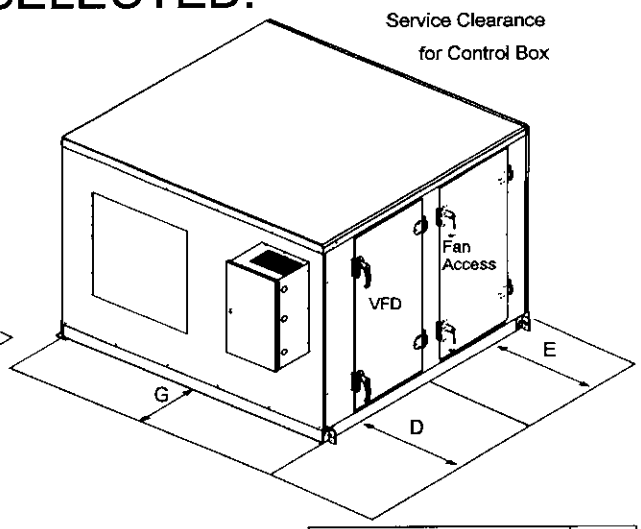

Note: At a minimum, these clearance dimensions are recommended on one side of the unit for regular service and maintenance. Refer to as-built submittal for locations of items such as filter access doors, coil, piping connections, motor locations, etc. Sufficient clearance must be provided on all sides of unit for removal of panels or section-to-section attachment. Clearance for starters, VFDs, or other high-voltage devices must be provided per NEC requirements.

Component	All Sizes
G (control box HV or box size large)	36
G (Box size small or medium)	13

Component	3	4	6	8	10	12	14	17	21	21 TALL	25	25 TALL	30	30 TALL	35	35 TALL	40	40 TALL	50	50 TALL	57	57 TALL	66	80	100	120
A (filter)	48	48	48	48	48	48	48	48	48	48	48	48	48	48	48	48	48	48	48	48	48	48	52	56	58	58
B (coil, humidifier)	48	59	59	66	77	82	87	87	95	77	95	77	109	87	115	96	128	96	141	110	141	110	156	156	170	197
B (staggered coil)	N/A	N/A	N/A	N/A	N/A	N/A	N/A	N/A	67	N/A	67	N/A	76	N/A	80	N/A	88	N/A	96	N/A	96	N/A	105	105	113	129
C (UV Lights)	48	48	48	48	48	48	48	48	48	48	48	48	48	48	48	48	48	48	48	48	48	48	52	56	58	58
C (TCAC)	43	59	59	63	75	81	83	83	58	75	58	75	83	83	75	59	83	83	83	83	83	83	83	83	75	83
D (External Starter, VFD, LV box or Overload box)	61	61	61	61	61	61	61	61	64	64	64	64	64	64	64	64	64	64	64	64	64	64	64	64	64	64
D (Internal Starter or VFD)	48	48	48	48	48	48	48	48	48	48	48	48	48	48	48	48	48	48	48	48	48	48	48	48	48	48
E (fan)	48	48	48	48	51	54	58	61	60	51	66	51	66	58	66	60	70	60	77	66	77	66	93	93	101	101
F (Gas Heat Ext Vestible)	N/A	N/A	89	90	108	100	100	105	115	N/A	115	N/A	118	N/A	136	N/A	140	N/A	156	N/A	156	N/A	170	179	180	N/A
F (Gas Heat Int Vestible)	N/A	N/A	56	63	74	79	84	84	92	N/A	92	N/A	106	N/A	112	N/A	125	N/A	138	N/A	138	N/A	153	153	167	194

Accessory - Performance Climate Changer
Item: A1 Qty: 1 Tag(s): CSAA-1

Base Detail

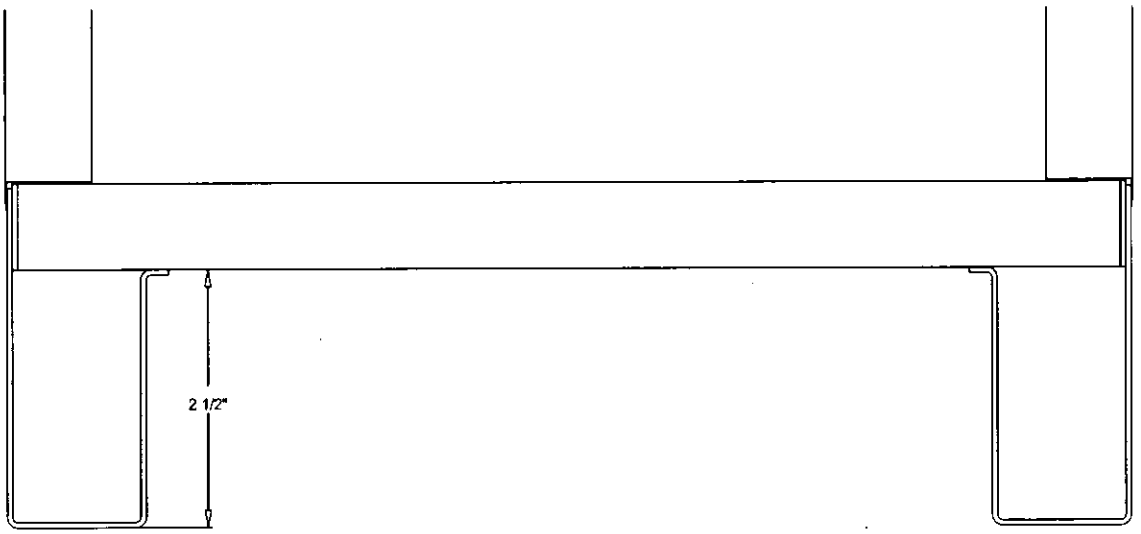

Accessory - Performance Climate Changer
Item: A1 Qty: 1 Tag(s): CSAA-1

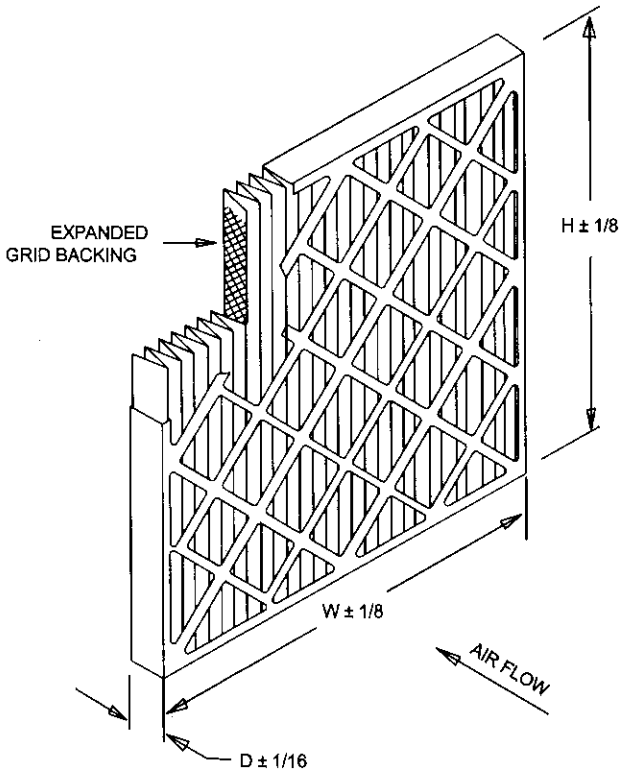

STANDARD CONSTRUCTION
1. 100 % Synthetic White Un-Dyed Media
2. 10.0 Pleats Per Foot
3. Expanded Metal Pleat Supports
4. Moisture Resistant Beverage Board Frame
5. Double Wall Frame

NOTES
1. MERV 8-A Per ASHRAE 52.2-2007 Appendix J.
2. Final Resistance: 1/0" W.G.
3. Rated Velocity: 500 FPM
4. Class 2 Filter Per U.L. Standard 900
5. Maximum Operating Temperature: 225 DEG. F

MODEL NUMBER	NOMINAL SIZE IN. W X H X D	ACTUAL SIZE IN. W X H X D	RATED AIR FLOW CFM	INITIAL RESISTANCE IN. W.G.	MEDIA AREA SQ. FT.
MX40-STD2-217	10 X 20 X 2	9-1/2 X 19-1/2 X 1-3/4	700	0.29	4.7
MX40-STD2-220	12 X 20 X 2	11-1/2 X 19-1/2 X 1-3/4	840	0.29	5.5
MX40-STD2-210	12 X 24 X 2	11-3/8 X 23-3/8 X 1-3/4	1000	0.29	6.2
MX40-STD2-239	14 X 20 X 2	13-1/2 X 19-1/2 X 1-3/4	980	0.29	5.7
MX40-2TD2-241	14 X 25 X 2	13-1/2 X 24-1/2 X 1-3/4	1220	0.29	7.1
MX40-STD2-245	15 X 20 X 2	14-1/2 X 19-1/2 X 1-3/4	1050	0.29	6.2
MX40-STD2-201	16 X 20 X 2	15-1/2 X 19-1/2 X 1-3/4	1120	0.29	6.7
MX40-STD2-216	16 X 24 X 2	15-3/8 X 23-3/8 X 1-3/4	1340	0.29	8.0
MX40-STD2-202	16 X 24 X 2	15-1/2 X 24-1/2 X 1-3/4	1400	0.29	8.0
MX40-STD2-280	15 X 20 X 2	17-1/2 X 19-1/2 X 1-3/4	1250	0.29	7.8
MX40-STD2-212	18 X 24 X 2	17-3/8 X 23-3/8 X 1-3/4	1500	0.29	9.3
MX40-STD2-285	18 X 25 X 2	17-1/2 X 24-1/2 X 1-3/4	1570	0.29	9.7
MX40-STD2-203	20 X 20 X 2	19-1/2 X 19-1/2 X 1-3/4	1400	0.29	8.3
MX40-STD2-211	20 X 24 X 2	19-3/8 X 23-3/8 X 1-3/4	1670	0.29	9.9
MX40-STD2-204	20 X 25 X 2	19-1/2 X 24-1/2 X 1-3/4	1750	0.29	10.3
MX40-STD2-205	24 X 24 X 2	23-3/8 X 23-3/8 X 1-3/4	2000	0.29	11.7
MX40-STD2-225	25 X 25 X 2	24-1/2 X 24-1/2 X 1-3/4	2170	0.29	13.6

Accessory - Performance Climate Changer
Trap Schedule
Item: A1 Qty: 1 Tag(s): CSAA-1

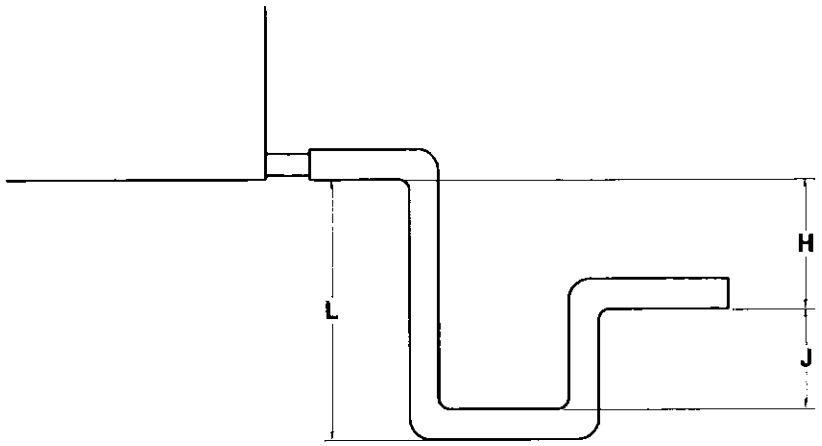

Drain pan trapping for section under negative pressure

L = H + J + pipe diameter where:
H = 1 inch for each inch of negative pressure (loaded filters) plus 1 inch
J = ½ H

Drain pan trapping for section under positive pressure

L = H + J + pipe diameter where:
H = 1/2 inch (minimum)
J = ½ inch plus the unit positive static pressure at coil discharge (loaded filters)

Unit Tag(s)	Unit Size	Entering Ext. Static Pressure (in H2O)	Discharge Ext. Static Pressure (in H2O)	Drain pan Section Location	Recommended Trap Dimensions[1]			Selected Baserail Height (in)[1]
					H (in)	J (in)	L (in)	
CSAA-1[2]	Unit size 21	1.175	1.175	Coil section [2]	4.127	2.063	7.190	2.500

[1] To ensure proper condensate trapping the field installed housekeeping pad height is the responsibility of the contractor.
[2] The external static pressure used for fan selection was assumed to be divided 50% to entering duct external static pressure and 50% discharge external static pressure.

Accessory - Performance Climate Changer
Filter Schedule
Item: A1 Qty: 1 Tag(s): CSAA-1

Unit Tag(s)	Unit Size	Filter Location	Filter Arrangement	Filter Depth	Filter Type	MERV Rating	Filter Quantity	Filter Size
CSAA-1	Unit size 21	Filter section [1]	Angled filter	2in. filter frame	No prefilter		-	-
					Pleated media - run set	MERV 8	12	16in.x25in.

Field Wiring - Performance Climate Changer
MCA MOP Schedule
Item: A1 Qty: 1 Tag(s): CSAA-1

Unit Tag(s)	Circuit	Circuit Description	Voltage/Phase/Hz	MCA (A)	MOP (A)
CSAA-1	1	Supply fan motor(s)	200-208/3/60	54.25	90.00

Field Installed Options - Part/Order Number Summary
This is a report to help you locate field installed options that arrive at the jobsite. This report provides part or order numbers for each field installed option, and references it to a specific product tag. It is NOT intended as a bill of material for the job.

Product Family - Performance Climate Changer

Item	Tag(s)	Qty	Description	Model Number
A1	CSAA-1	1	Performance Climate Changer (CSAA)	CSAA021UA

Field Installed Option Description	Part/Ordering Number
Pleated media - run set	